MTSB-6036Seated

59.75" x 35.5" x 21.5"

Low-profile, Seated
End Drain / Rectangle

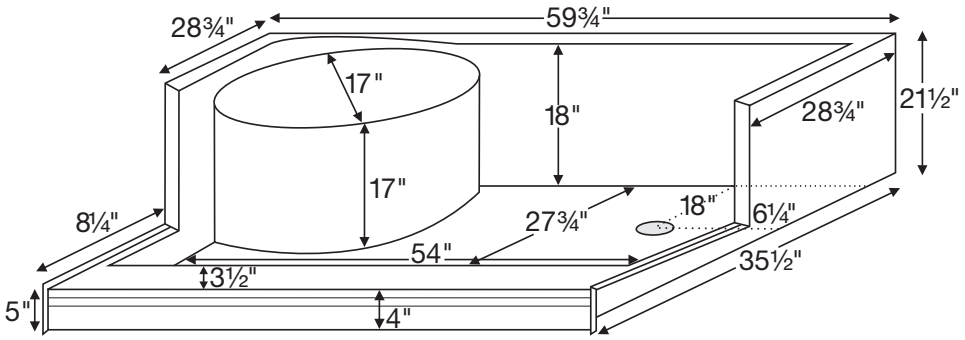

NOTE: When ordering, please specify left- or right-hand drain.

Shower Base

Standard Colors: Part # SB6036Seated **$1,520** *Choose from:*
White (CWH), Bone (CBN), Biscuit (CBS)

Other Colors: Part # SB6036SeatedGRP1 **$1,770** *Choose from:*
Black (CBL), Sterling Silver (CSS)

Quick Ship/Priority - reduces lead time (QSPRI) Call for availability. **$350**

Options

PVC Drain Kit with Chrome cover (included with shower base)
Also available in the following finishes:
Brushed Nickel (SBDKBN) **$75**
Special Finishes (SBDKSF) **$225** *Send sample - allow 2 weeks*

Solid Brass Drain Kit with Stainless cover (SBDKSB) **$170**

Pre-Leveled Foam Base (PLFSB) **$150** *see p. E-71*

Radiance® - shower seat & floor heating system (RAD100) **$999**
Radiance heating grids are fully integrated within the acrylic shell structure of the shower seat and floor area. Requires a 110-volt, 15 amp GFCI and remote installation of control box & keypad. For complete information, see p. E-72 or visit mtibaths.com.

Accessories *- see pp. E-73-E-79*

Teak Shower Tray (TK-6036SEATED) **$755**

Teak Bath Mat (TK-MAT3018) (custom sizes also available) **$395**

Shower Niche - constructed of Engineered Solid Stone (ESS)
Matte Finish - White (SSNWHMT) or Biscuit (SSNBSMT) **$440**
Gloss Finish - White (SSNWHGL) or Biscuit (SSNBSGL) **$590**

Teak bath mat

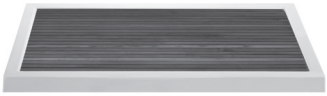

Teak shower tray

Shower niche

CONSTRUCTION AND STANDARD FEATURES

- Single, front threshold design with integrated seat. 3.5" drain opening pre-drilled.
- Low-profile, narrow threshold and shallow pan.
- Integral tile flange on 3 sides to facilitate installation.
- Textured bottom that meets ASTM F-462-1994 certification requirements for safer showering.
- Durable Lucite® cast acrylic shell is extremely scratch- and stain-resistant, yet renewable because the color goes all the way through the material.
- Non-porous surface makes cleaning and sanitizing faster and more effective.
- Multi-layered backing of thick fiberglass / resin / titanium encloses wood reinforcement to prevent flexing of floor pan.
- At least 30% thicker and stronger than other makes.
- Lead time - 5 business days.
- 10-year Limited Residential Warranty.
- Shipping Weight: 100 lbs

SHOWER BASE INSTALLATION: Add bedding compound to fully support bottom of shower base. MTI's optional Pre-Leveled Foam Base requires no additional bedding compound or support. See installation instructions. Measurements are ± 1/2" and are subject to change without notice. Data herein supersedes all previous prior to publication date indicated below.

©2015 by MTI Baths, Inc. Modification Rights Reserved.